Outdoor Cabinet

12U W600×D600

P.N:BX.6060.12.OD

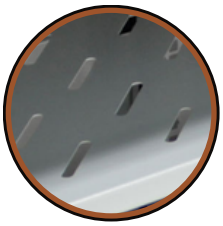

- Exquisite design with precise dimensions and craftsmanship
- Galvanized plate is more protected corrosion resistance and more longer lifespan.
- Two side panels for each side can be separately open with locks,
- Casters and support feet can be installed simultaneously
- Optional pedestals for fixation, cable routing, ventilation, and rat proof
- Curved front screen door & back double screen door enable equipment to ventilate well
- Various optional accessories

P.N:BX.6060.12.OD

SPECIFICATIONS

Standard Configuration

S/N	Name	Qty	Unit	Material	Finishing
1	Top Covers	1	PC	1.2mm SPCC cold rolled steel	Electrostatic spray
2	Bottom plates	1	PC	1.2mm SPCC cold rolled steel	Electrostatic spray
3	Fans	2	PC	1.2mm SPCC cold rolled steel	Electrostatic spray
4	Frames	2	PC	1.2mm SPCC cold rolled steel	Electrostatic spray
5	Front Door	1	PC	5mm tempered glasses 1.2mm cold-rolled quality steel	Electrostatic spray
6	side panels	2	PC	1.2mm SPCC cold rolled steel	Electrostatic spray
7	Mounting profile	4	PC	1.5mm SPCC cold rolled steel	SGLC
8	Shelves	1	PC	1.2mm SPCC cold rolled steel	Electrostatic spray
9	Casters	4	PC	-----	-----

10	Color	RAL7035
11	USE	Inside,IP66
12	Loading capacity	80kgs
13	WIDTH	600
14	DEPTH	600
15	Height	635

P.N:BX.6060.12.OD

DETAILED DRAWING

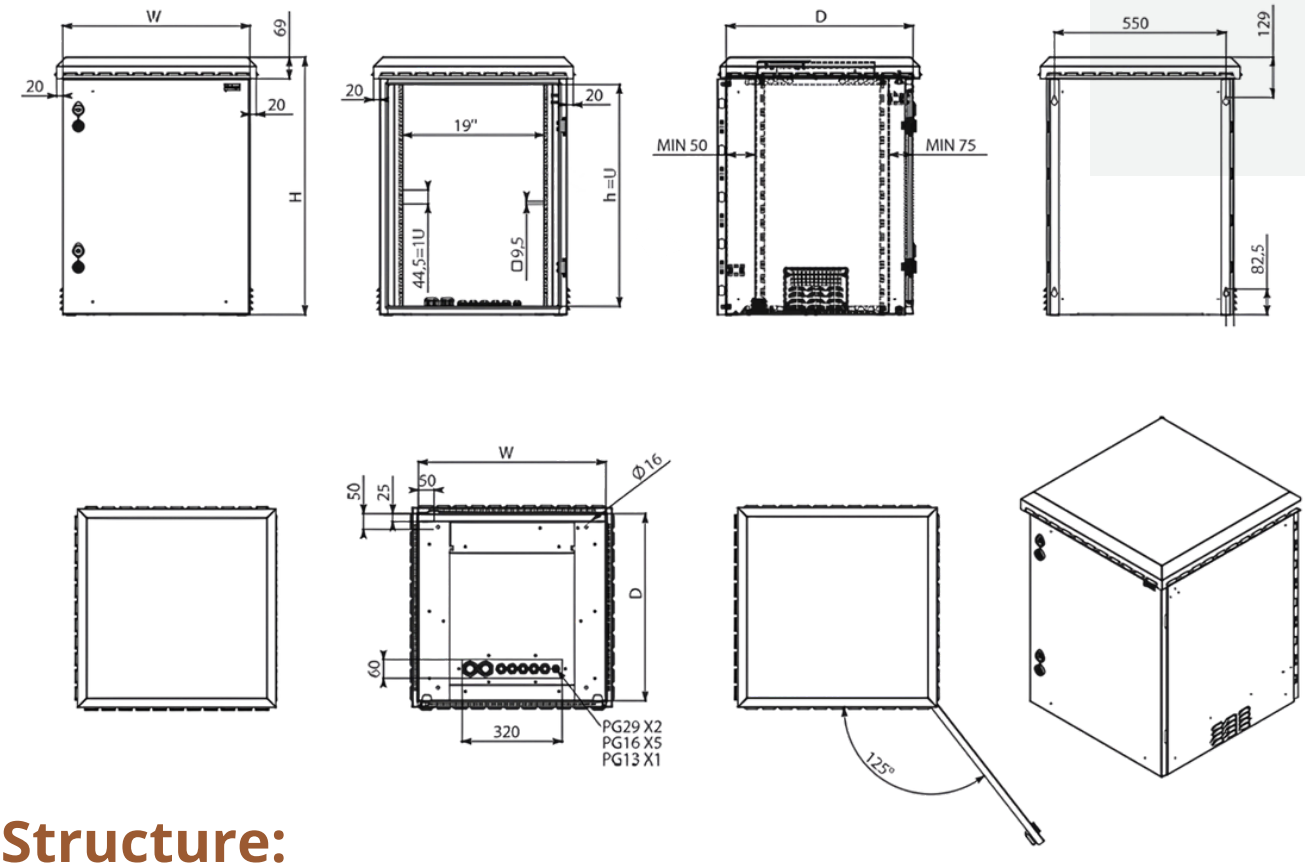

Structure:

1-Top cover
2- Bottom plate
3- Fans
4- Frame
5- Front door
6- Side panel
7- Horizontal bracket
8- Profile rails
9- Shelf
10- Caster
11- Support foot

P.N:BX.6060.12.OD

Carton Information

Item No	BX.6060.12.OD
Product Description	Network Cabinet 600*600*12U
Network Cabinet	600*600*12U
Qty	1PC
N.W	70KGS
G.W	75KGS
Meas	67*67*72

Including

2 Fan

Fixed shelf

PDU
6 ; metal; 2m cable; with a switch; Germany plug and socket 6
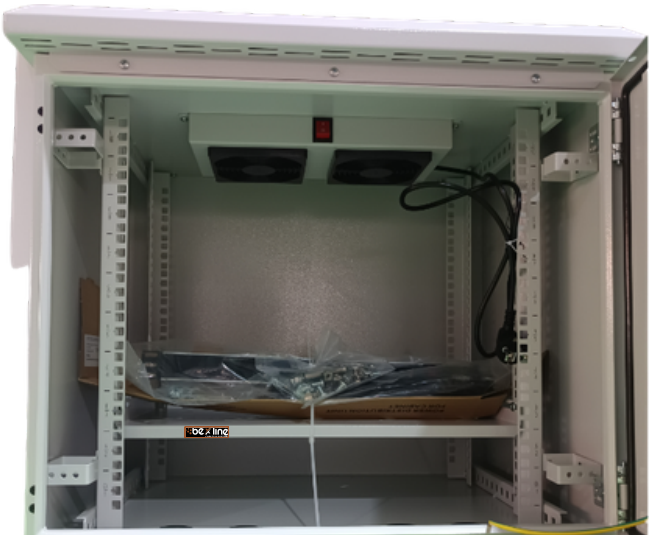
The Rack In Reality